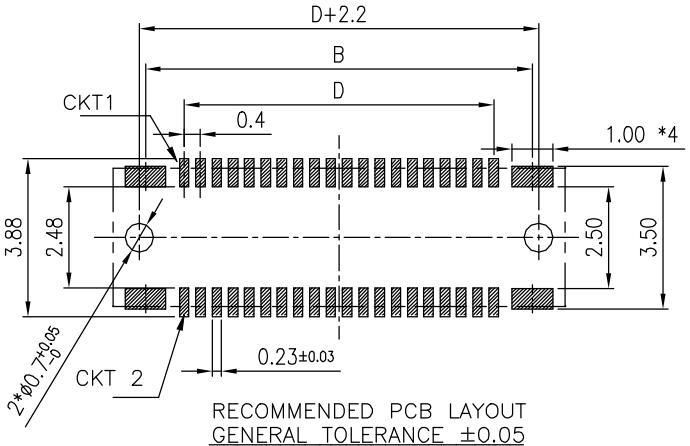

RECOMMENDED PCB LAYOUT
GENERAL TOLERANCE ±0.05
WITH BOSS

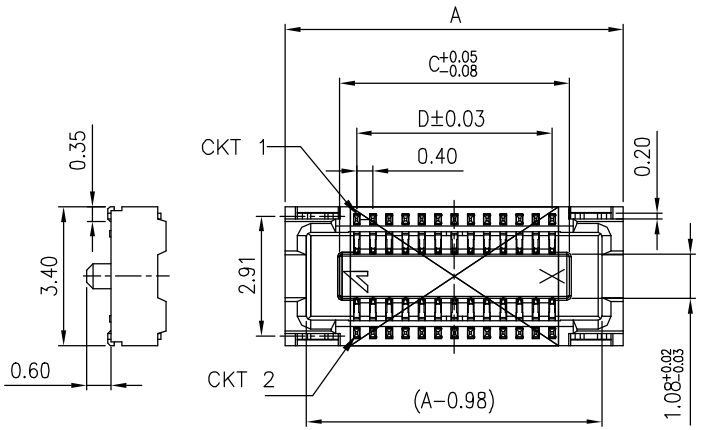

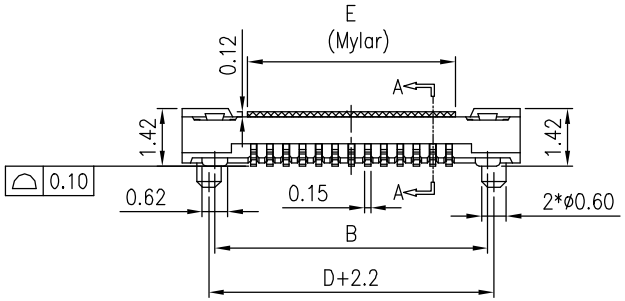

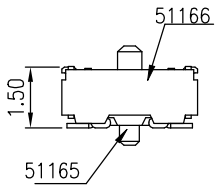

NOTES:
1. MATERIAL:
   1.1 HOUSING: THERMOPLASTIC LCP, HIGH TEMP., UL94V-0; COLOR:BLACK.
   1.2 CONTACT: PHOSPHOR BRONZE
   1.3 FITTING NAIL: COPPER ALLOY
2. FINISH:
   2.1 CONTACT:
      50~100u" NICKEL UNDERPLATING OVERALL.
      1: GOLD FLASH PLATING
      C: 15u"GOLD ON CONTACT AREA
      A: 3u"GOLD ON CONTACT AREA
   2.2 SOLDER:
      50~100u" NICKEL UNDERPLATING OVERALL.
      1: GOLD FLASH PLATING
      C: GOLD FLASH PLATING
      A: GOLD FLASH PLATING
   2.3 FITTING NAIL:
      50~100u" NICKEL UNDERPLATNG OVERALL.
      80~120u" MATT TIN PLATING ON SOLDER TAILS.
3. REFLOW SOLDER CAPABLE TO 260°C PER ACES SPEC.
4. SPEC. PLS. REFER TO PS-50007-xxxxx-xxx
5. PART NUMBER

51166-XXX X X-XXX

CKT

PACKING
0: TAPE & REEL
4: TAPE & REEL WITH MYLAR

PLATING
1: GOLD FLASH
C: 15u"GOLD ON CONTACT AREA
A: 3U" GOLD ON CONTACT AREA

XXX	Color	Material	Polarization	Packing
001	Black	LCP	with boss	88664-xxxxB-TRP

CKT	Dim A	Dim B	Dim C	Dim D	Dim E
60	15.10	13.50	12.44	11.60	10.0
80	19.10	17.50	16.44	15.60	15.0

QUALITY SYMBOLS
MAJOR
CRITICAL

GENERAL TOLERANCES (UNLESS SPECIFIED)
X. ±0.5
.X ±0.25
.XX ±0.15
.XXX ±0.1
ANGLES ±2°

DRAWN BY: Lei,shanjun	DATE: 19'/07/17	ACES ELECTRONICS	
CHECKED BY: Lu, jingquan	DATE: 19'/07/17	TITLE: 0.4mm BTB D/R RCPT SMT S/T TYPE	
APPROVED BY: hsieh,fu yu	DATE: 19'/07/17		
UNITS: mm		SIZE: A4	DWG NO.: 51166-xxxxx-xxx
SCALE: 6 : 1	SHEET NO.: 1 OF 1	REV: C	PART NO.: SEE NOTES